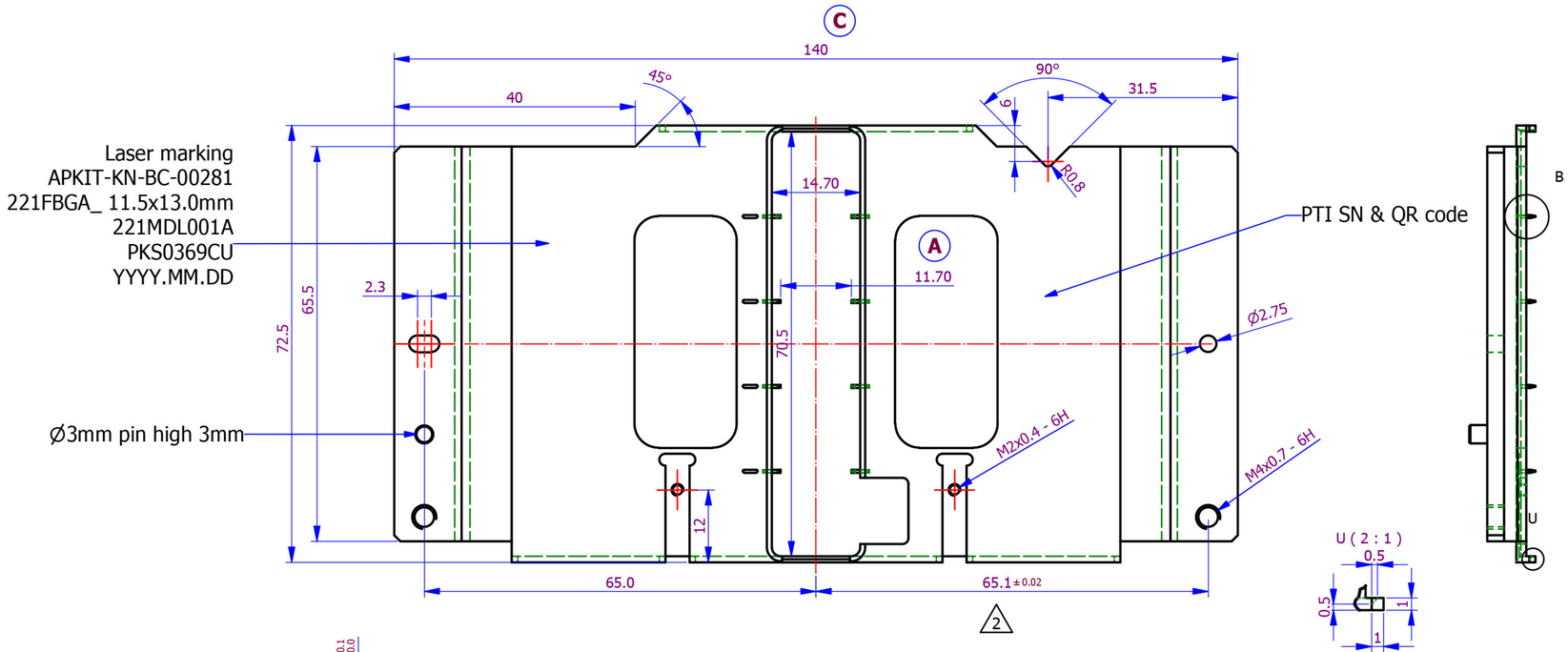

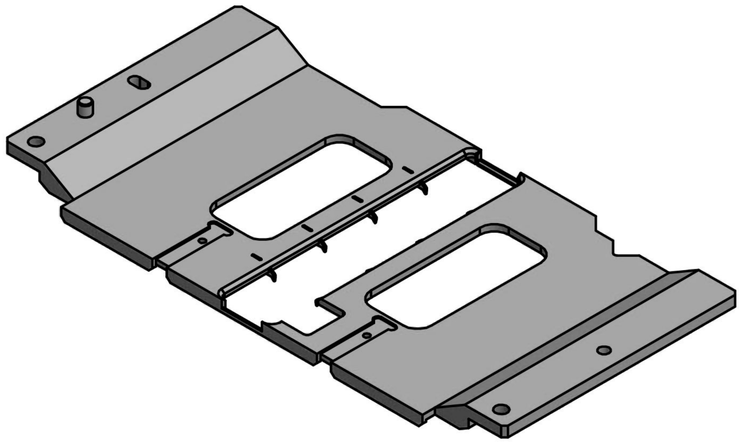

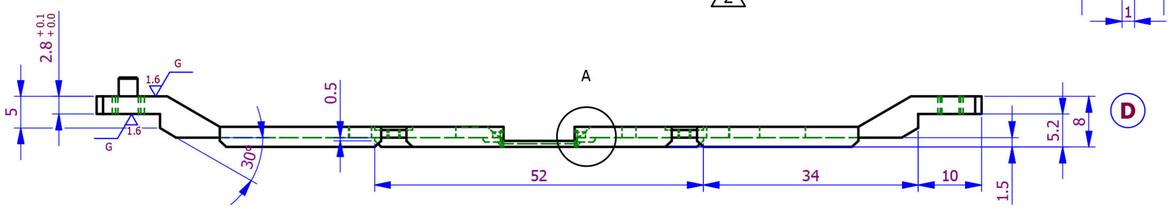

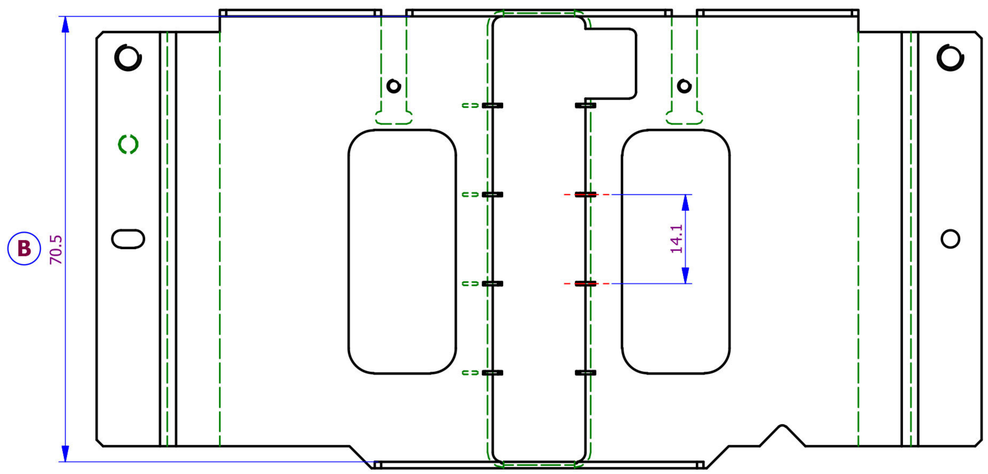

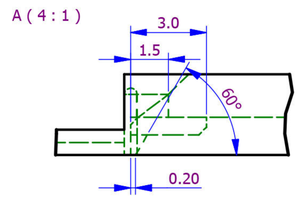

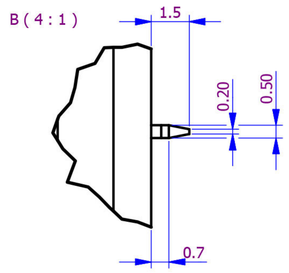

Parts1.Ground spring 2pcs/set
Parts2.Flat-head Phillips screw M2x2L 2pcs/set

The symbols Ⓐ Ⓑ ... Ⓩ
are used for IQC only.