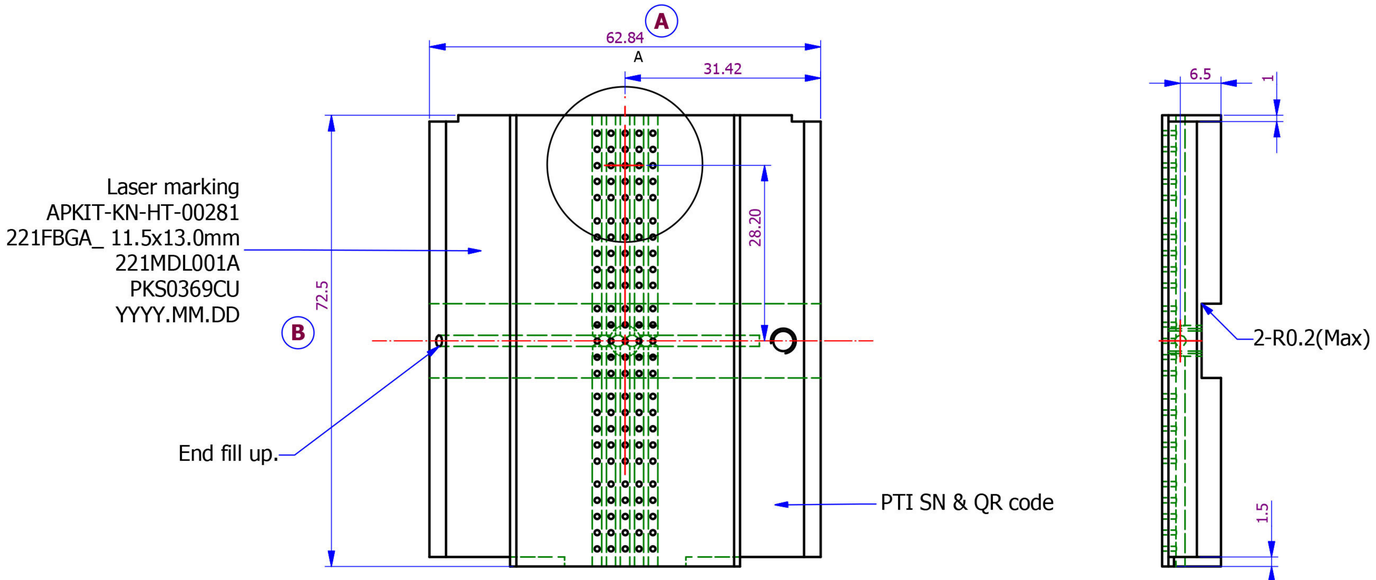

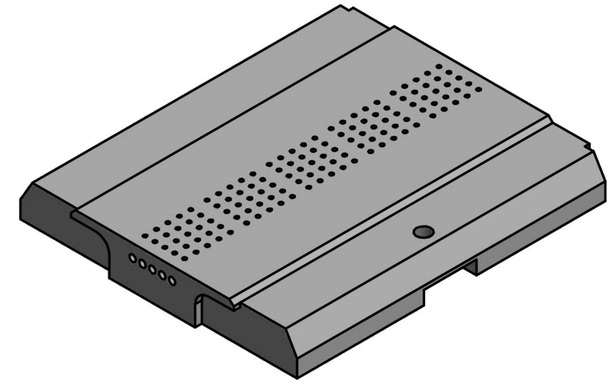

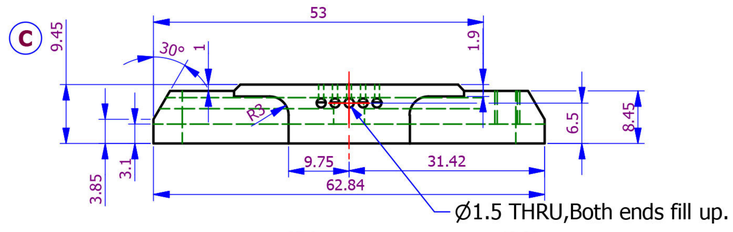

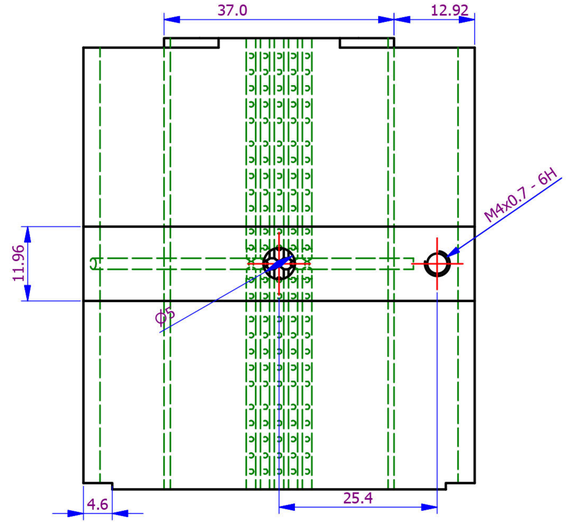

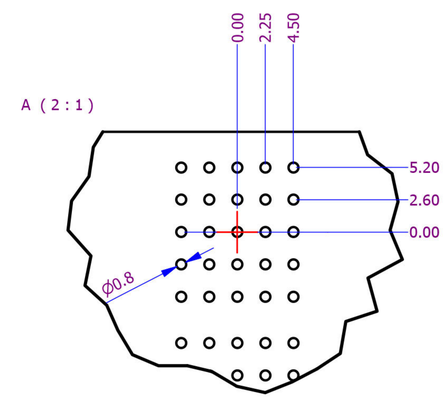

The symbols Ⓐ Ⓑ ... Ⓩ
are used for IQC only.