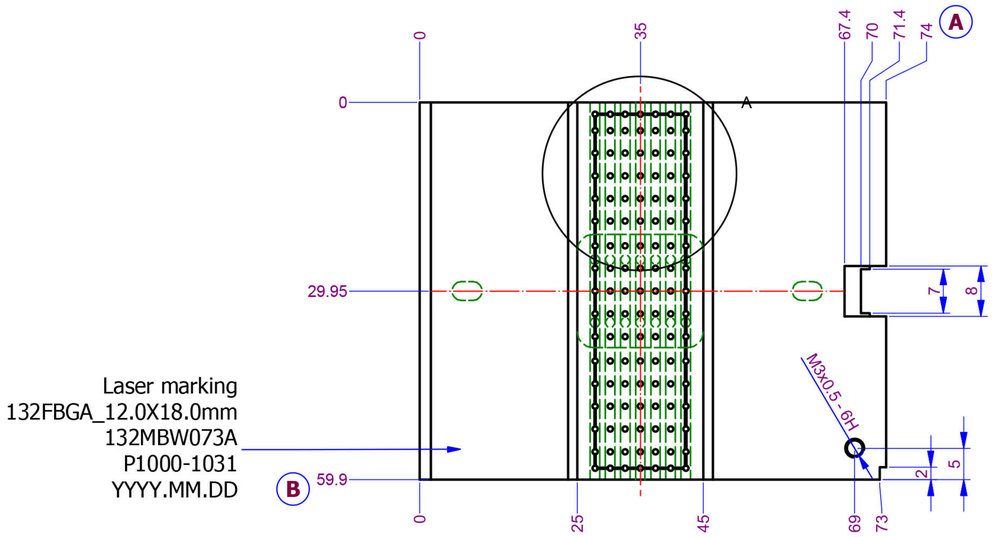

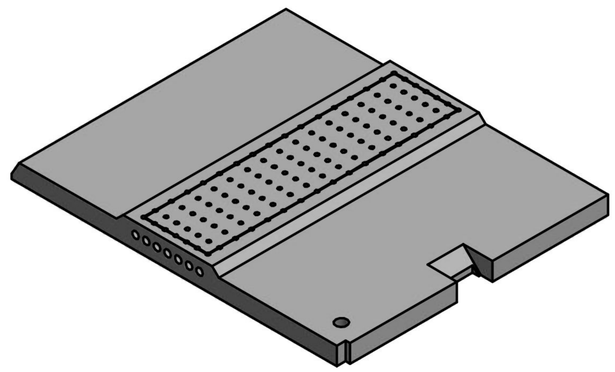

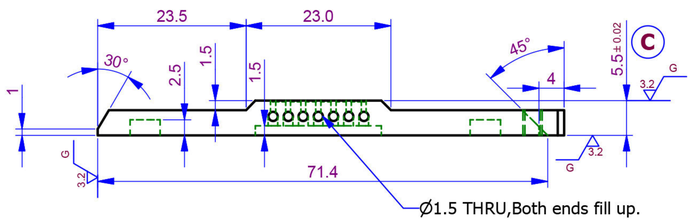

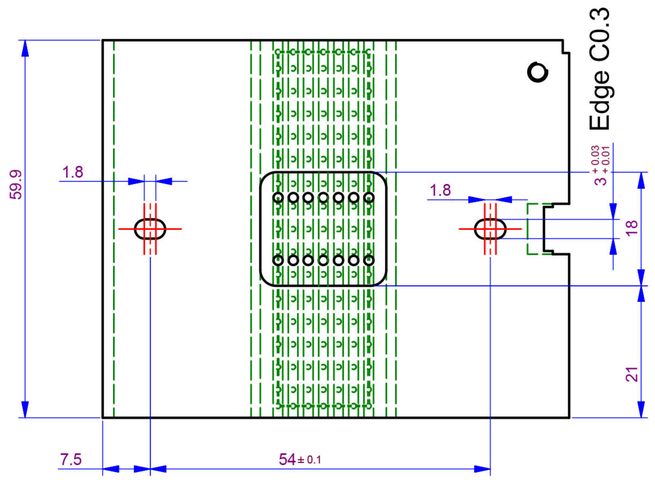

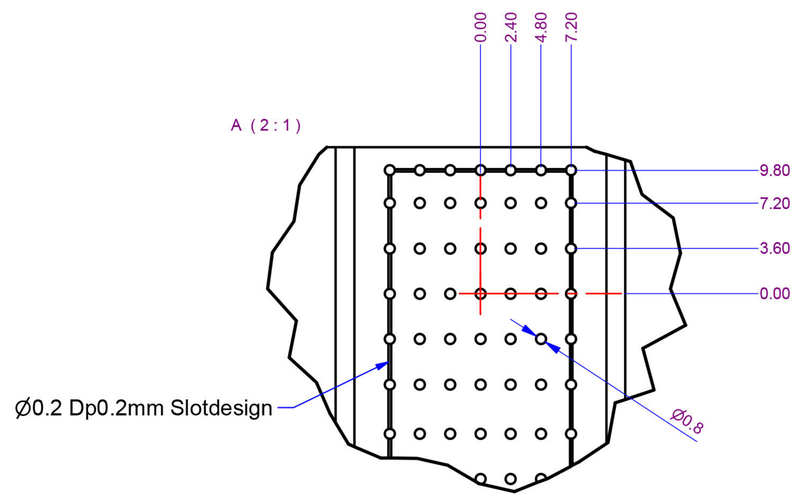

The symbolsⒶⒷ...Ⓩ
are used for IQC only.